CAUTION:

1. THE LOCATIONS, SIZES AND/OR DEPTHS OF EXISTING UNDERGROUND UTILITIES AS SHOWN ON THIS PLAN WERE OBTAINED FROM SOURCES OF VARYING RELIABILITY. THE CONTRACTOR IS CAUTIONED THAT ONLY ACTUAL EXCAVATION WILL REVEAL THE TYPES, EXTENT, SIZES, LOCATIONS AND DEPTHS OF SUCH UNDERGROUND UTILITIES. (A REASONABLE EFFORT HAS BEEN MADE TO LOCATE AND DELINEATE ALL KNOWN UNDERGROUND UTILITIES). CONTRACTOR SHALL VERIFY LOCATION AND DEPTH PRIOR TO ANY EXCAVATION OR IMPROVEMENT.
2. CONTRACTOR SHALL CONTACT UNDERGROUND SERVICE ALERT FOR LOCATION OF UNDERGROUND UTILITIES AT LEAST 48 HOURS PRIOR TO COMMENCEMENT OF CONSTRUCTION.PHONE (800) 642-2444. CONTRACTOR SHALL VERIFY ALL EXISTING UTILITIES PRIOR TO BEGINNING ANY WORK ON THIS SITE.
3. THESE DRAWINGS DO NOT ADDRESS CONTRACTOR MEANS, METHODS OR PROCESSES THAT MAY BE ASSOCIATED WITH ANY TOXIC SOILS IF FOUND ON SITE. THE CONTRACTOR IS RESPONSIBLE FOR COMPLYING WITH ALL CITY AND COUNTY STANDARDS AND APPROPRIATE REGULATIONS IF TOXIC SOILS ARE ENCOUNTERED. CONTRACTOR MUST NOTIFY THE OWNER'S PROJECT MANAGER IMMEDIATELY IF ANY SOILS ARE EVEN SUSPECTED OF BEING CONTAMINATED.

GENERAL SITE NOTES:

1. CONTRACTOR SHALL VISIT THE SITE PRIOR TO BIDDING ON THIS WORK AND CONSIDER THE EXISTING CONDITIONS AND SITE CONSTRAINTS IN THE BID. CONTRACTOR SHALL BE IN THE POSSESSION OF AND FAMILIAR WITH ALL APPLICABLE GOVERNING AGENCIES STANDARD DETAILS AND SPECIFICATIONS PRIOR TO SUBMITTING OF A BID.
2. ALL WORK IN THE PUBLIC RIGHT-OF-WAY SHALL CONFORM TO ALL APPLICABLE GOVERNING AGENCIES STANDARD DETAILS & SPECIFICATIONS.
3. CONTRACTOR AND HIS/HER SUBCONTRACTORS SHALL BE IN POSSESSION AND FAMILIAR WITH THE GEOTECHNICAL REPORT BY: MILLER PACIFIC ENGINEERING GROUP DATED: 4/27/2017 , JOB NO. 779.253.
4. PRIOR TO BEGINNING WORK, AND AFTER INITIAL HORIZONTAL CONTROL STAKING, CONTRACTOR SHALL FIELD CHECK ALL ELEVATIONS MARKED WITH (E) AND REPORT ANY DISCREPANCIES GREATER THAN 0.05' TO OWNER'S PROJECT MANAGER.
5. DAMAGE TO ANY EXISTING SITE IMPROVEMENTS, UTILITIES AND/OR SERVICES TO REMAIN SHALL BE RESPONSIBILITY OF THE CONTRACTOR. CONTRACTOR SHALL REPAIR AND/OR REPLACE IN KIND.
6. CONTRACTOR SHALL REPLACE ALL STRUCTURES AND GRATE LIDS FOR VAULTS, CATCH BASINS, ETC.,, WITH VEHICULAR-RATED STRUCTURES IN ALL TRAFFIC ACCESSIBLE AREAS.
7. CONTRACTOR SHALL MAINTAIN THE EXISTING SITE IN A SAFE AND USABLE MANNER SUCH THAT EMERGENCY VEHICLE ACCESS IS AVAILABLE AT ALL TIMES. CONTRACTOR TO SUPPLY, INSTALL AND MAINTAIN ALL NECESSARY FENCING, GATES, SIGNAGE, TEMPORARY WALKWAYS, AND PROVISIONS FOR ENSURING THE PROJECT'S SECURITY AND SAFE PASSAGEWAY AROUND IT BY CAMPUS STAFF, STUDENTS AND VISITORS AT ALL TIMES.
8. CONTRACTOR TO BE RESPONSIBLE FOR OBTAINING ALL NECESSARY & REQUIRED PERMITS FOR THIS WORK.
9. NOTIFICATION PRIOR TO THE START OF THE WORK MUST BE GIVEN TO THE UNDERGROUND SERVICE ALERT (USA).
10. CONTRACTOR SHALL BE RESPONSIBLE FOR ACQUIRING APPROVAL FROM DISTRICT PERSONNEL AND PROJECT ARCHITECT FOR THE LOCATION OF ALL STAGING, STORAGE, CONSTRUCTION OFFICE AND LAY DOWN AREAS.
11. CONSTRUCTION HOURS TO BE VERIFIED AND APPROVED BY DISTRICT AND LOCAL AGENCIES.
12. CONTRACTOR MUST HAVE OWNER'S REPRESENTATIVE OR ENGINEER/ARCHITECT FIELD REVIEW AND APPROVE FORMWORK PRIOR TO PLACING SITE CONCRETE FOR CURBS, RAMPS, STAIRS, WALKS, DRIVEWAYS AND RELATED FLATWORK.
13. IF ARCHEOLOGICAL MATERIALS ARE UNCOVERED DURING GRADING, TRENCHING OR OTHER ON-SITE EXCAVATION, ALL WORK ON THE SITE SHALL BE STOPPED AND THE CITY IMMEDIATELY NOTIFIED. THE COUNTY CORONER & THE NATIVE AMERICAN HERITAGE COMMISSION SHALL ALSO BE NOTIFIED AND PROCEDURES FOLLOWED AS REQUIRED IN APPENDIX "K" OF THE CALIFORNIA ENVIRONMENTAL ACT.
14. CONTRACTOR TO COORDINATE WITH SCHOOL PERSONNEL AND ENSURE HIS/HER WORK DOES NOT IMPACT SCHOOL OPERATION AND TRAFFIC CIRCULATION OF BUSSES, EMERGENCY VEHICLES, STAFF AND STUDENT VEHICLES.

SITE MAINTENANCE:

1. CONTRACTOR SHALL: GATHER ALL CONSTRUCTION DEBRIS ON A REGULAR BASIS AND PLACE IT IN A DUMPSTER OR OTHER CONTAINER WHICH IS EMPTIED OR REMOVED ON A REGULAR BASIS. WHEN APPROPRIATE, USE TARPS ON THE GROUND TO COLLECT FALLEN DEBRIS OR SPLATTERS THAT COULD CONTRIBUTE TO STORM WATER RUNOFF POLLUTION.
2. REMOVE ALL DIRT, GRAVEL, RUBBISH, REFUSE, AND GREEN WASTE FROM STREET PAVEMENT AND STORM DRAINS ADJOINING THE SITE. LIMIT CONSTRUCTION ACCESS ROUTES ONTO THE SITE AND PLACE GRAVEL PADS AT THESE LOCATIONS. DO NOT DRIVE VEHICLES AND EQUIPMENT OFF THE PAVED OR GRAVELED AREAS DURING WET WEATHER.
3. SWEEP OR VACUUM THE STREET PAVEMENT AND SIDEWALKS ADJOINING THE PROJECT SITE AND THE ON-SITE PAVED AREAS ON A DAILY BASIS. SCRAPE CAKED-ON MUD AND DIRT FROM THESE AREAS BEFORE SWEEPING. CORNERS AND HARD TO REACH AREAS SHALL BE SWEPT MANUALLY.
4. IF THE STREETS, SIDEWALKS AND/OR PARKING LOT ARE PRESSURE WASHED, DEBRIS MUST BE TRAPPED AND COLLECTED TO PREVENT ENTRY INTO THE STORM DRAIN SYSTEM. NO CLEANING AGENT MAY BE DISCHARGED INTO THE STORM DRAIN. IF ANY CLEANING AGENT OR DEGREASER IS USED, WASH WATER MUST BE COLLECTED AND DISCHARGED TO THE SANITARY SEWER, SUBJECT TO THE APPROVAL OF THE OWNER'S PROJECT MANAGER, OR OTHERWISE DISPOSED OF THROUGH APPROVED DISPOSAL METHODS.
5. CREATE A CONTAINED AND COVERED AREA ON THE SITE FOR THE STORAGE OF BAGS, CEMENT, PAINTS, OILS, FERTILIZERS, PESTICIDES, OR OTHER MATERIALS USED ON THE SITE THAT HAVE THE POTENTIAL OF BEING DISCHARGED INTO THE STORM DRAIN SYSTEM THROUGH EITHER BEING WIND-BLOWN OR IN THE EVENT OF A MATERIAL SPILL.
6. NEVER CLEAN MACHINERY, EQUIPMENT OR TOOLS INTO A STREET, GUTTER OR STORM DRAIN.
7. ENSURE THAT CEMENT TRUCKS, PAINTERS, OR STUCCO/PLASTER FINISHING CONTRACTORS DO NOT DISCHARGE WASH WATER FROM EQUIPMENT, TOOLS OR RINSE CONTAINERS INTO GUTTERS OR DRAINS.
8. PREVENT DUST FROM LEAVING THE SITE AND ACCUMULATING ON ADJACENT AREAS AS REQUIRED IN THE DUST CONTROL NOTES ON THIS SHEET.
9. PREVENT SEDIMENT LADEN STORM RUN-OFF FROM LEAVING THE SITE OR ENTERING STORM DRAIN OR SANITARY SEWER SYSTEMS AS REQUIRED IN THE EROSION AND SEDIMENTATION CONTROL NOTES ON THIS SHEET.
10. MAINTAIN EXISTING TREES AND PLANTS THAT ARE TO REMAIN AS REQUIRED BY THE TREE AND PLANT PROTECTION NOTES ON THIS SHEET.

DUST CONTROL:

1. WATER TRUCKS SHALL BE PRESENT AND IN USE AT THE CONSTRUCTION SITE. ALL PORTIONS OF THE SITE SUBJECT TO BLOWING DUST SHALL BE WATERED AS OFTEN AS DEEMED NECESSARY BY THE APPROPRIATE GOVERNMENTAL AGENCY IN ORDER TO ENSURE PROPER CONTROL OF BLOWING DUST FOR THE DURATION OF THE PROJECT.
2. WATERING ASSOCIATED WITH ON-SITE CONSTRUCTION ACTIVITY SHALL TAKE PLACE BETWEEN THE ESTABLISHED CONSTRUCTION HOURS AND SHALL INCLUDE AT LEAST ONE LATE-AFTERNOON WATERING TO MINIMIZE THE EFFECTS OF BLOWING DUST.
3. ALL PUBLIC STREETS AND MEDIANS SOILED OR LITTERED DUE TO THIS CONSTRUCTION ACTIVITY SHALL BE CLEANED AND SWEPT ON A DAILY BASIS DURING THE WORK WEEK, OR AS OFTEN AS DEEMED NECESSARY BY THE OWNER'S ENGINEER/INSPECTOR, TO THE SATISFACTION OF THE CITY'S DEPARTMENT OF PUBLIC WORKS.
4. WATERING ON PUBLIC STREETS OR POWER WASHING SEDIMENTATION ON STREETS SHALL NOT OCCUR, UNLESS CONTRACTOR COLLECTS AND FILTERS THE WASH WATER PRIOR TO ITS ENTERING THE CITY'S STORM DRAIN SYSTEM.
5. ON-SITE PAVED ACCESS ROADS, PARKING AREAS, AND STAGING AREAS SHALL BE SWEPT DAILY WITH A WATER SWEEPER.
6. ALL TRUCKS HAULING SOIL, SAND, AND OTHER LOOSE MATERIALS SHALL BE COVERED WITH TARPAULINS OR OTHER EFFECTIVE COVERS.
7. THE SPEED OF ALL VEHICLES DRIVING ON UNPAVED ROADS OR PORTIONS OF THE SITE SHALL BE LIMITED TO 10 MPH.

EROSION AND SEDIMENTATION CONTROL NOTES:

1. EROSION CONTROL MEASURES ARE INTENDED TO PREVENT SEDIMENT AND DEBRIS FROM ENTERING THE CITY, COUNTY STORM DRAIN SYSTEM, SANITARY SEWER SYSTEM OR FROM LEAVING THE SITE. THE CONTRACTOR SHALL MAKE ADJUSTMENTS IN THE FIELD TO MAKE SURE THAT THIS CONCEPT IS CARRIED OUT.
2. EROSION CONTROL FACILITIES AND MEASURES ARE TO BE INSTALLED AND OPERABLE BY OCTOBER 1st AND SHALL CONTINUE IN EFFECT UNTIL DISTURBED AREAS ARE STABILIZED OR UNTIL INSTALLATION OF THE PERMANENT SITE IMPROVEMENTS.
3. CONTRACTOR SHALL ASSUME THE CONCEPTS ON THE EROSION CONTROL PLAN, CS.1, ARE SCHEMATIC MINIMUM REQUIREMENTS, THE FULL EXTENT OF WHICH ARE TO BE DETERMINED BY THE CONTRACTOR. CONTRACTOR IS RESPONSIBLE FOR THE EXACT DESIGN AND EXTENT OF THE EROSION CONTROL SYSTEM SO THAT IT WORKS WITH THE CONTRACTOR'S INTENDED USE AND MANAGEMENT OF THE CONSTRUCTION SITE, AND IS APPROVAL BY THE APPROPRIATE GOVERNMENTAL AGENCIES.
4. ALL EROSION CONTROL FACILITIES SHALL BE INSPECTED BY THE CONTRACTOR AND REPAIRED, AS REQUIRED, AT THE CONCLUSION OF EACH WORKING DAY DURING THE RAINY SEASON. THE CONTRACTOR SHALL INSPECT THE EROSION CONTROL FACILITIES AND MAKE NECESSARY REPAIRS PRIOR TO ANTICIPATED STORMS AND AT REASONABLE INTERVALS DURING STORMS OF EXTENDED DURATION. REPAIRS TO DAMAGED FACILITIES SHALL BE MADE IMMEDIATELY UPON DISCOVERY.
5. AS SOON AS PRACTICAL FOLLOWING EACH STORM, THE CONTRACTOR SHALL REMOVE ANY ACCUMULATION OF SILT OR DEBRIS FROM THE EROSION CONTROL SEDIMENT BASINS AND SHALL CLEAR THE OUTLET PIPES OF ANY BLOCKAGE.
6. PROVISION SHALL BE MADE TO ASSURE THAT BORROW AREAS AND STOCK PILED SOILS ARE PROTECTED FROM EROSION WITH EROSION CONTROL MEASURES SATISFACTORY TO THE APPROPRIATE GOVERNMENTAL AGENCIES.
7. ALL STOCKPILE MATERIALS SHALL BE COVERED AND PROTECTED FROM THE ELEMENTS WITH A NON-PERMEABLE PLASTIC MEMBRANE SO AS TO PREVENT SOIL EROSION FROM OCCURRING. THIS COVER SHALL BE SECURED WITH ANCHORS OR WEIGHTS OF SUFFICIENT SIZE AND FREQUENCY TO PREVENT DISRUPTION OR REMOVAL BY WIND OR RAIN. ANCHORAGE AT THE BASE OF THE SLOPE SHALL BE AS INDICATED BY DETAIL ON THIS SHEET. ALL MEMBRANE AND COVERINGS SHALL BE INSPECTED AND MAINTAINED BY THE CONTRACTOR OR HIS REPRESENTATIVE ON A FREQUENT AND REGULAR BASIS. SPECIFICALLY BEFORE AND AFTER ANY INCLEMENT WEATHER, WITH ANY NECESSARY REPAIRS BEING IMMEDIATELY PERFORMED. COVERINGS SHALL REMAIN IN PLACE UNTIL THE STOCKPILE(S) IS READY TO BE REMOVED FROM THE SITE, AT WHICH TIME THEY MAY BE REMOVED AND DISPOSED OF BY THE CONTRACTOR.
8. EARTHEN BERMS, STRAW-FIBER FILLED TUBES AND/OR GEOTEXTILE FABRIC BARRIER (SILT FENCING) SHALL BE CONSTRUCTED AS SHOWN TO PREVENT OFF-FLOW OF SEDIMENT-LADEN RUNOFF, OR THE EROSION OF BANKS OR ROADWAYS. ALL SUCH TEMPORARY EROSION CONTROL MEASURES SHALL BE REMOVED BY THE CONTRACTOR AS SOON AS CONSTRUCTION IS COMPLETED AND VEGETATION IS ESTABLISHED. HAY BALES SHALL NOT BE USED.
9. ALL PAVED AREAS SHALL BE KEPT CLEAR OF EARTH MATERIAL AND DEBRIS, SWEPT ON A REGULAR BASIS, TO THE SATISFACTION OF THE ON-SITE INSPECTORS.
10. SWEEP OR VACUUM THE STREET PAVEMENT AND SIDEWALKS ADJOINING THE PROJECT SITE AND THE ON-SITE PAVED AREAS ON A DAILY BASIS OR AS REQUIRED BY THE CITY. SCRAPE CAKED-ON MUD AND DIRT FROM THESE AREAS BEFORE SWEEPING. CORNERS AND HARD TO REACH AREAS SHALL BE SWEPT MANUALLY.
11. PERSON RESPONSIBLE FOR EROSION CONTROL IMPLEMENTATION, TO BE DETERMINED.
12. WHEEL WASHERS SHALL BE INSTALLED AND USED TO CLEAN ALL TRUCKS AND EQUIPMENT LEAVING THE CONSTRUCTION SITE. IF WHEEL WASHERS CANNOT BE INSTALLED, TIRES OR TRACKS OF ALL TRUCKS AND EQUIPMENT SHALL BE WASHED OFF BEFORE LEAVING THE CONSTRUCTION SITE.

TREE/PLANT PROTECTION NOTES:

1. PRIOR TO BEGINNING CONSTRUCTION ON SITE, CONTRACTOR SHALL IDENTIFY, CONFIRM WITH OWNER AND PROTECT EXISTING TREES AND PLANTS DESIGNATED AS TO REMAIN.
2. PROVIDE 6 FOOT TALL TREE PROTECTION FENCE WITH DISTINCTIVE MARKING VISIBLE TO CONSTRUCION EQUIPMENT, ENCLOSING DRIP LINES OF TREES DESIGNATED TO REMAIN.
3. WORK REQUIRED WITHIN FENCE LINE SHALL BE HELD TO A MINIMUM. AVOID UNNECESSARY MOVEMENT OF HEAVY EQUIPMENT WITHIN FENCED AREA AND DO NOT PARK ANY VEHICLES UNDER DRIP LINE OF TREES. DO NOT STORE EQUIPMENT OR MATERIALS WITHIN FENCE LINE.
4. PRIOR TO REMOVING ROOTS AND BRANCHES LARGER THAN 2" IN DIAMETER OF TREES OR PLANTS THAT ARE TO REMAIN, CONSULT WITH THE OWNER'S PROJECT MANAGER.
5. ANY GRADE CHANGES GREATER THAN 6" WITHIN THE DRIPLINE OF EXISTING TREES SHALL NOT BE MADE WITHOUT FIRST CONSULTING THE LANDSCAPE ARCHITECT / CIVIL ENGINEER.
6. PROTECT EXISTING TREES TO REMAIN FROM SPILLED CHEMICALS, FUEL OIL, MOTOR OIL, GASOLINE AND ALL OTHER CHEMICALLY INJURIOUS MATERIAL, AS WELL AS FROM PUDDLING OR CONTINUOUSLY RUNNING WATER. SHOULD A SPILL OCCUR, STOP WORK IN THAT AREA AND CONTACT THE CITY'S ENGINEER / INSPECTOR IMMEDIATELY. CONTRACTOR SHALL BE RESPONSIBLE TO MITIGATE DAMAGE FROM SPILLED MATERIAL AS WELL AS MATERIAL CLEAN UP.
7. PROVIDE TEMPORARY IRRIGATION TO ALL TREES AND PLANTS THAT ARE IN OR ADJACENT TO CONSTRUCTION AREAS WHERE EXISTING IRRIGATION SYSTEMS MAY BE AFFECTED BY THE CONSTRUCTION. ALSO PROVIDE TEMPORARY IRRIGATION TO RELOCATED TREES.
8. CONTRACTOR SHALL BE RESPONSIBLE FOR ONGOING MAINTENANCE OF ALL TREES DESIGNATED TO REMAIN AND FOR MAINTENANCE OF RELOCATED TREES STOCKPILED DURING CONSTRUCTION. CONTRACTOR WILL BE REQUIRED TO REPLACE TREES THAT DIE DUE TO LACK OF MAINTENANCE.
9. CONSULT WITH LANDSCAPE ARCHITECT SHOULD SPECIAL CIRCUMSTANCES ARISE OR QUESTIONS ARISE REGARDING THESE PROCEDURES.

DEMOLITION NOTES :

1. DEMOLITION AND CONSTRUCTION WORK MAY BE PERFORMED OVER THE TOP OF AND AROUND TELEPHONE AND POWER SERVICES. CONTRACTOR SHALL WORK BY HAND IN ALL AREAS WHERE THESE SERVICES MIGHT BE HARMED BY LARGER LESS PRECISE EQUIPMENT.
2. THE CONTRACTOR SHALL LOCATE AND CLEARLY MARK (AND THEN PRESERVE THESE MARKERS) FOR THE DURATION OF CONSTRUCTION OF ALL TELEPHONE, DATA, STREET LIGHT, SIGNAL LIGHT AND POWER FACILITIES THAT ARE IN OR NEAR THE AREA OF CONSTRUCTION.
3. CONTRACTOR'S BID IS TO INCLUDE ALL VISIBLE SURFACE AND ALL SUBSURFACE FEATURES IDENTIFIED TO BE REMOVED OR ABANDONED IN THESE DOCUMENTS.
4. THE CONTRACTOR SHALL BE RESPONSIBLE FOR A SITE INSPECTION TO FULLY ACKNOWLEDGE THE EXTENT OF THE DEMOLITION WORK.
5. THE CONTRACTOR SHALL BE RESPONSIBLE FOR OBTAINING ANY AND ALL PERMITS NECESSARY FOR ENCROACHMENT, GRADING, DEMOLITION, AND DISPOSAL OF SAID MATERIALS AS REQUIRED BY PRIVATE, LOCAL AND STATE JURISDICTIONS. THE CONTRACTOR SHALL PAY ALL FEES ASSOCIATED WITH THE DEMOLITION WORK.
6. CONTRACTOR SHALL PAY DISPOSAL FEES.
7. BACKFILL ALL DEPRESSIONS AND TRENCHES FROM DEMOLITION OF FOUNDATIONS & UTILITIES TO THE SATISFACTION OF THE GEOTECHNICAL ENGINEER.
8. WITHIN LIMITS OF WORK, REMOVE CURBS, GUTTERS, LANDSCAPING, SIGNAGE, TREES, SHRUBS, ASPHALT, UNDERGROUND PIPES, ETC. AS INDICATED ON THE DRAWINGS.
9. REMOVAL OF LANDSCAPING SHALL INCLUDE ROOTS AND ORGANIC MATERIALS TO THE SATISFACTION OF THE GEOTECHNICAL ENGINEER.
10. PRIOR TO BEGINNING DEMOLITION WORK ACTIVITIES, CONTRACTOR SHALL INSTALL EROSION CONTROL MEASURES OUTLINED IN THE EROSION CONTROL PLAN & DETAILS.
11. CONTRACTOR SHALL BE RESPONSIBLE FOR DISPOSING ALL DEMOLITION MATERIALS, OR STORING SELECTED ITEMS BY OWNER'S REPRESENTATIVE AT DESIGNATED LOCATIONS.
12. ABANDONED UTILITIES WITHIN 6 FEET OF THE PROPOSED BUILDING FOOTPRINT SHOULD BE REMOVED IN THEIR ENTIRETY. UTILITIES OUTSIDE THE BUILDING AREA SHOULD BE REMOVED OR ABANDONED IN-PLACE BY LOCATING AND PLUGGING ALL LATERALS AND ENDS OF PIPES WITH CONCRETE, AND THEN FILLING THE ENTIRE PIPE WITH GROUT. REMOVAL OF ANY UTILITIES WILL REQUIRE THAT ALL TRENCHES BE BACKFILLED PER THE SPECIFICATIONS WITH APPROPRIATE TESTS BY THE GEOTECHNICAL ENGINEER TO VERIFY COMPACTION VALUES.

SITE FENCING NOTES :

1. CONTRACTOR SHALL PROVIDE A CONSTRUCTION FENCE AROUND THE ENTIRE AREA OF DEMOLITION AND CONSTRUCTION, INCLUDING ALL STAGING, STORAGE, CONSTRUCTION OFFICE AND LAYDOWN AREAS.
2. FENCE LOCATION MAY BE ADJUSTED FROM TIME TO TIME AS CONSTRUCTION PROCEEDS TO EXCLUDE SOME AREAS WHERE CONSTRUCTION WORK IS NOT BEING DONE AND THE AREA IS NOT OBJECTIONABLE IN VISUAL APPEARANCE, AT THE DISCRETION AND APPROVAL OF THE DISTRICT STAFF. CONSTRUCTION FENCE SHALL BE A MINIMUM OF A 6' HIGH GALVANIZED CHAIN LINK.
3. CONSTRUCTION FENCE ADDRESSED IN THESE NOTES IS TO MEET MINIMUM SEPARATION REQUIREMENTS FROM CONSTRUCTION SITE AND THE CAMPUS. CONTRACTOR IS REQUIRED TO INSTALL ANY ADDITIONAL FENCING, BARRICADES OR OTHER SAFETY DEVICES NEEDED TO KEEP THE SITE SECURE & SAFE AT ALL TIMES.
4. ALL FENCING SHALL BE INSTALLED AT ONLY LOCATIONS DESIGNATED AND APPROVED BY DISTRICT PERSONNEL, WITH PARTICULAR CARE GIVEN SUCH THAT THE FENCING DOES NOT CREATE A TRAFFIC HAZARD OR NUISANCE, OR RESTRICT CAMPUS CIRCULATION & FIRE EXITING.

GRADING & EARTHWORK NOTES:

1. ALL PAVED AREAS ARE TO SLOPE A MINIMUM OF 1%. ACCESSIBLE STALLS AND LOADING ZONES ARE TO SLOPE AT A MAXIMUM OF 2% IN ANY DIRECTION AND ACCESSIBLE PATHWAYS ARE TO SLOPE AT A MAXIMUM OF 8.33%, WITH A MAXIMUM CROSS-SLOPE OF 2%. ANY AREAS ON THE SITE NOT CONFORMING TO THESE BASIC RULES DUE TO EXISTING CONDITIONS OR DISCREPANCIES IN THE DOCUMENTS ARE TO BE REPORTED TO THE ARCHITECT/ENGINEER PRIOR TO PROCEEDING WITH FORMWORK FOR CURBS AND/OR FLATWORK.
2. CONTRACTOR SHALL DETERMINE EARTHWORK QUANTITIES BASED ON THE TOPOGRAPHIC SURVEY, THE SOILS INVESTIGATION AND THE PROPOSED SURFACE GRADES AND BASE THE BID ACCORDINGLY. ANY DIFFERENCES BETWEEN THE STATE IN WHICH THE PROJECT SITE IS DELIVERED TO THE CONTRACTOR AND THESE DOCUMENTS SHOULD BE NOTED TO THE CIVIL ENGINEER.
3. ALL FILL SHALL BE COMPACTED PER THE CONSTRUCTION SPECIFICATIONS AND THE CONTRACTOR SHALL COORDINATE AND COMPLY WITH THE OWNER'S TESTING AGENCY TO TAKE THE APPROPRIATE TESTS TO VERIFY COMPACTION VALUES.
4. IMPORT SOILS MUST MEET THE REQUIREMENTS OF THE CONSTRUCTION SPECIFICATIONS.
5. COORDINATE THE PLACEMENT OF ALL SLEEVES FOR LANDSCAPE IRRIGATION (WATER AND CONTROL WIRING) AND STREET LIGHTING PRIOR TO THE PLACEMENT OF ANY ASPHALT, BASEROCK OR CONCRETE SURFACING. SEE LANDSCAPE AND SITE ELECTRICAL DRAWINGS.
6. DO NOT ADJUST GRADES ON THIS PLAN WITHOUT PRIOR WRITTEN APPROVAL OF ARCHITECT & ENGINEER.
7. SPOT ELEVATIONS ARE TO FINISHED SURFACE.
8. TOP OF CONCRETE CURBS ARE 0.50' ABOVE TOP OF PAVING ELEVATIONS, U.N.O.
9. ROUGH GRADING TO BE WITHIN 0.1' AND FINISH GRADES ARE TO BE WITHIN 0.05'.
10. SUBGRADES SHALL BE PROOF ROLLED, OR AS INSTRUCTED PER THE CONSTRUCTION SPECIFICATIONS.
11. CONTRACTOR TO GRADE LANDSCAPED (NON PAVED) AREAS TO A FINISH GRADE OF 8" BELOW PROPOSED FINISH GRADE SHOWN ON THE GRADING PLANS. DISTRICT WILL INSTALL TOP 8 INCHES OF TOPSOIL AND PERFORM FINISH GRADING. CONTRACTOR TO GRADE PLANTER & LANDSCAPED AREAS (NON-PAVED AREAS ADJACENT TO BUILDINGS) TO FINISH GRADE 24" BELOW FINISH FLOOR OF BUILDING. DISTRICT TO INSTALL FINAL FILL MATERIAL, AND INSTALL IRRIGATION SYSTEMS.
12. AFTER STAKING FOR HORIZONTAL CONTROL CONTRACTOR SHALL FIELD CHECK ALL ELEVATIONS MARKED WITH (E) AND REPORT ANY DISCREPANCIES GREATER THAN 0.05' TO ARCHENGR.
13. ALL EXISTING UTILITY STRUCTURES WITHIN THE AREA OF WORK SHALL HAVE THE LIDS, GRATES, COVERS, ETC. ADJUSTED TO BE FLUSH WITH FINISHED GRADES. CONTRACTOR SHALL IDENTIFY ALL SUCH ITEMS BY USE OF THESE PLANS AND THOROUGH FIELD INVESTIGATION.
14. GEOTECHNICAL CONSULTANT TO BE NOTIFIED OF DELIVERY OF ALL IMPORTED SOILS TO SITE FOR HIS/HER INSPECTION AND APPROVAL PRIOR TO PLACING BY CONTRACTOR.

EARTHWORK QUANTITY NOTES:

1. THE CONTRACTOR IS RESPONSIBLE FOR DETERMINING THE QUANTITIES OF ALL FORMS OF EARTHWORK ON THIS PROJECT AND BASING THE BID ON THOSE QUANTITIES WITH FULL KNOWLEDGE THAT ADDITIONAL PROCESSES - INCLUDING ENGINEERING - AND QUANTITIES ARE ALSO TO BE INCLUDED IN THE BID PER THE FOLLOWING NOTES.
2. THE CONTRACTOR SHALL MAKE AN INITIAL DETERMINATION OF THE QUANTITIES, BASED ON A DETAILED SITE VISIT, THE TOPOGRAPHIC SURVEY, THE GEOTECHNICAL REPORT, THE FINISH GRADES SHOWN ON THESE DRAWINGS, THE SIZE AND EXTENT OF FOOTINGS, THE PREPARATION AND MATERIALS USED FOR BUILDING SLABS, PAVEMENT SECTIONS, AND THE SIZE AND DEPTH OF UTILITY TRENCHES, INCLUDING THE UTILITY CONTRACTORS ANTICIPATED RE-USE OF EXISTING MATERIAL FOR BACKFILL IF ANY.
3. THE CONTRACTOR SHALL MEET THE GRADES SHOWN ON THE DRAWINGS, ADJUSTING THE AMOUNT OF IMPORT OR EXPORT AS REQUIRED TO DO SO. NO ASSUMPTIONS SHOULD BE MADE ABOUT THE SITE BALANCING. NO ADJUSTMENTS TO THE GRADES SHALL BE PERMITTED UNLESS SPECIFICALLY APPROVED BY THE ARCHENGR IN WRITING AFTER THE IMPACT OF ANY GRADE CHANGES (IMPACT TO RAMPS, STAIRS, WORK BY OTHERS, ETC.) HAS BEEN THOROUGHLY REVIEWED BY THE ARCHENGR. WHEN PREPARING THE EARTHWORK BIDS, DO NOT ASSUME ANY CHANGES TO THE FINISHED GRADES SHOWN ON THESE DRAWINGS WILL BE PERMITTED.
4. THE EARTHWORK SPECIFICATIONS AND GEOTECHNICAL REPORT HAVE SPECIFIC REQUIREMENTS FOR BRINGING FILL MATERIAL ONTO THE SITE (IMPORT) SINCE THE EXISTING SOILS ARE NOT SUITABLE FOR FILL MATERIAL IN CERTAIN AREAS. THE EARTHWORK SPECIFICATIONS AND GEOTECHNICAL REPORT MAY IDENTIFY ALTERNATIVES THAT ALLOW TREATMENT OF EXISTING SOILS TO MINIMIZE IMPORT, HOWEVER MEETING THE GRADES SHOWN ON THESE DRAWINGS MUST ALSO BE CONSIDERED WHEN DETERMINING THE METHOD.
5. AFTER THE BID IS AWARDED THE CONTRACTOR SHALL SUBMIT A DETAILED EARTHWORK HANDLING PLAN THAT SHOWS THE INTENT AND LOCATIONS OF EARTH MOVEMENT AND QUANTITIES OF CUT, FILL, IMPORT AND EXPORT AS THE PROJECT WAS BID. PROPOSING ALTERNATIVE PLANS THAT MAY IDENTIFY GRADE ADJUSTMENTS TO MINIMIZE THE DISTANCE SOIL IS MOVED OR TO MINIMIZE IMPORT OR EXPORT WILL NOT RELIEVE THE CONTRACTOR OF THE RESPONSIBILITY OF PREPARING AN EARTHWORK PLAN AS BID.

GENERAL UTILITY SYSTEM NOTES :

1. ALL TRENCHES SHALL BE BACKFILLED PER THE SPECIFICATIONS WITH APPROPRIATE TESTS TO VERIFY COMPACTION VALUES.
2. CONTRACTOR SHALL STAKE LOCATION OF ABOVE GROUND UTILITY EQUIPMENT (HYDRANTS, TRANSFORMERS, ETC.) AND MEET WITH THE APPROPRIATE GOVERNMENTAL AUTHORITY AND PROPER UTILITY AUTHORITY TO REVIEW LOCATION PRIOR TO INSTALLATION. THE APPROPRIATE GOVERNMENTAL AUTHORITY AND PROPER UTILITY AUTHORITY MUST SPECIFICALLY AGREE WITH LOCATION PRIOR TO PROCEEDING WITH THE INSTALLATION.
3. CONTRACTOR SHALL VERIFY (POTHOLE IF NECESSARY) SIZE, MATERIAL, LOCATION AND DEPTH OF ALL SYSTEMS THAT ARE TO BE CONNECTED TO OR CROSSED PRIOR TO THE TRENCHING OR INSTALLATION OF PROPOSED UTILITIES, AND INFORM ENGINEER OF ANY CONFLICTS BEFORE PROCEEDING WITH WORK.
4. CATHODIC PROTECTION IS REQUIRED ON ALL METALLIC FITTINGS AND ASSEMBLIES THAT ARE IN CONTACT WITH THE SOIL. CONTRACTOR IS RESPONSIBLE FOR FULLY ENGINEERING AND INSTALLING THIS SYSTEM AND COORDINATE ANODE AND TEST STATION LOCATIONS WITH OWNER'S ENGINEER. SEE PROJECT SPECIFICATIONS FOR ADDITIONAL CORROSION PROTECTION REQUIREMENTS.
5. CONTRACTOR SHALL VERIFY ALL EXISTING UTILITIES, INVERTS AND LOCATIONS PRIOR TO BEGINNING ANY WORK ON THIS SITE.
6. ALL DRAINAGE STRUCTURES LOCATED IN VEHICULAR TRAFFIC AREAS SHALL HAVE TRAFFIC RATED COVERS AND BOLT-DOWN GRATES. ALL DRAINAGE STRUCTURES IN PEDESTRIAN ACCESSIBLE AREAS SHALL HAVE ADA APPROVED BOLT-DOWN GRATES.
7. ALL UTILITY STRUCTURES WITHIN THE AREA OF WORK SHALL HAVE THE LIDS, GRATES, COVERS, ETC. ADJUSTED TO BE FLUSH WITH FINISHED GRADES. CONTRACTOR SHALL IDENTIFY ALL SUCH ITEMS BY USE OF THESE PLANS AND FIELD INVESTIGATION.
8. SEE LANDSCAPE LAYOUT PLANS FOR IRRIGATION SLEEVE LOCATIONS.
9. ALL EXISTING UTILITY STRUCTURES (CLEANOUTS, VALVES, BOXES, MANHOLES, CB'S, ETC.) SHALL BE RAISED TO FINAL FINISH GRADE AND COMPLETED WITH THE NECESSARY LABOR AND MATERIALS TO BE IN ACCORDANCE WITH DETAILS SHOWN ON THESE PLANS.
10. CLEANOUTS, CATCH BASINS, MANHOLES AND AREA DRAINS ARE TO BE ACCURATELY LOCATED BY THEIR RELATIONSHIP TO THE BUILDING, FLATWORK, BUILDING UTILITIES, AND/OR CURB LAYOUT. NOT BY THE LENGTH OF PIPE SPECIFIED ON THE DRAWINGS. (WHICH IS APPROXIMATE)

GENERAL UTILITY SYSTEM NOTES (Cont.) :

11. SEE ELECTRICAL PLANS FOR SITE ELECTRICAL WORK. ADVISE ENGINEER OF ANY CONFLICTS WITH OTHER UTILITIES PRIOR TO BEGINNING WORK.
12. COMPLETE SYSTEMS: ALL UTILITY SYSTEMS ARE DELINEATED IN A SCHEMATIC MANNER ON THESE PLANS. CONTRACTOR IS TO PROVIDE ALL FITTINGS, ACCESSORIES & WORK NECESSARY TO COMPLETE THE UTILITY SYSTEM SO THAT IT IS FULLY FUNCTIONING FOR THE PURPOSE INTENDED.
13. SEE SPECIFICATION SECTION 01300 FOR SUBMITTAL REQUIREMENTS OF UTILITY COMPONENTS.

STORM DRAIN NOTES:

1. INSTALL DETECTABLE METALIZED WARNING TAPE AP

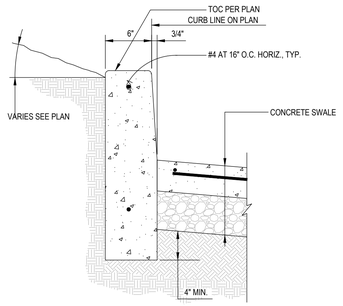

1 TYPICAL CONCRETE HIGH CURB

NOTES:

1. INSTALL 2-#5 SMOOTH REINFORCING DOWELS 2' LONG AT JOINTS WHERE NO CONCRETE SIDEWALK OCCURS BEHIND CURB.
2. PROVIDE 1/2" CONTROL/EXPANSION JOINTS AT 15'-0" O.C. AND INSTALL 3/8" ASPHALT IMPREGNATED FIBER ISOLATION JOINTS AT 15'-0" O.C. AND AT ALL CURB RETURNS AND CORNERS.

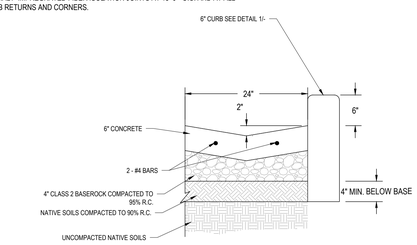

2 VALLEY GUTTER WITH CURB

MODEL	A	B	C
CB1212	12"	12"	4"
CB1818	18"	18"	5"
CB2424	24"	24"	5"

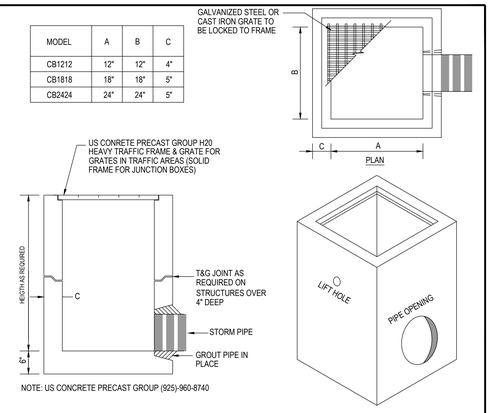

NOTE: US CONCRETE PRECAST GROUP (925)-960-8740

3 CATCH BASIN

GRADING LEGEND

XX.XX — GRADE ELEVATION

X% — SLOPE AND DIRECTION

GRADING KEYNOTES

1. INSTALL NEW 12'X12' CATCH BASIN, SEE DETAIL 3/-
2. INSTALL NEW CURB & VALLEY GUTTER, SEE DETAIL 2/-
3. CONNECT TO EXITING STORM DRAIN LINE
4. CONTRACTOR TO TRANSITION NEW VALLEY GUTTER INTO EXISTING GUTTER PAN.

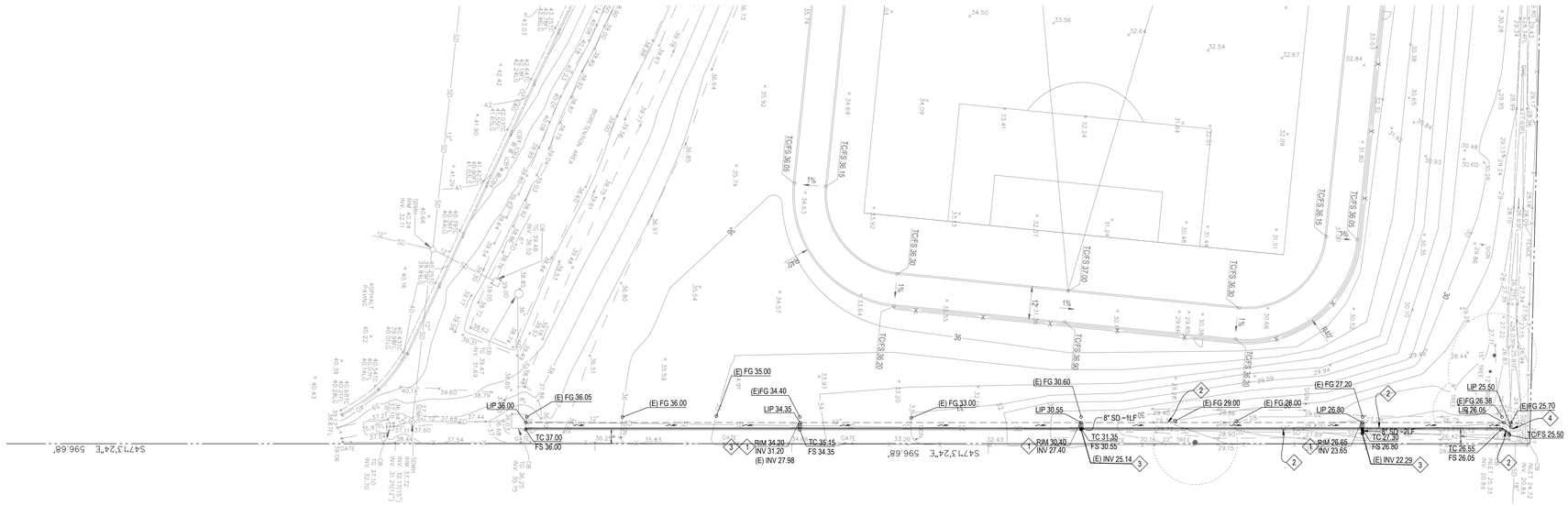

GENERAL CIVIL NOTES

GENERAL:

1. ALL PERMITS WILL BE SECURED BY THE OWNER AND IT IS THE RESPONSIBILITY OF THE CONTRACTOR TO COMPLY WITH THE CONDITIONS AND REQUIREMENTS OF THE PERMITS.
2. THE CONTRACTOR SHALL TAKE EFFECTIVE ACTION TO PREVENT THE FORMATION OF AN AIRBORNE DUST NUISANCE AND SHALL BE RESPONSIBLE FOR DAMAGE RESULTING FROM THEIR FAILURE TO DO SO.
3. THE CONTRACTOR SHALL PROVIDE ALL LIGHTS, SIGNS, BARRICADES, FLAGMEN OR OTHER DEVICES NECESSARY TO PROVIDE FOR SAFETY.
4. THE CONTRACTOR SHALL POST EMERGENCY TELEPHONE NUMBERS FOR THE POLICE, FIRE AMBULANCE, AND THOSE AGENCIES RESPONSIBLE FOR MAINTENANCE OF UTILITIES IN THE VICINITY OF THE JOB SITE.
5. LENGTHS OF SANITARY SEWERS AND STORM DRAINS SPECIFIED ARE HORIZONTAL DISTANCES AS MEASURED FROM CENTERS OF STRUCTURES ROUNDED TO THE NEAREST FOOT.
6. EXISTING UNDERGROUND UTILITIES AND IMPROVEMENTS ARE SHOWN IN THEIR APPROXIMATE LOCATIONS BASED UPON RECORD INFORMATION AVAILABLE TO THE ENGINEER AT THE TIME OF PREPARATION OF THESE PLANS. LOCATIONS MAY NOT HAVE BEEN VERIFIED IN THE FIELD AND NO GUARANTEE IS MADE AS TO THE ACCURACY OR COMPLETENESS OF THE INFORMATION SHOWN. THE CONTRACTOR SHALL PERFORM AT THEIR EXPENSE A FIELD OBSERVATION LOCATING ALL EXISTING UTILITIES INCLUDING ELEVATIONS AND NOTIFY THE OWNER AND THE ENGINEER OF ANY CONFLICTS PRIOR TO CONSTRUCTION. IT SHALL BE THE RESPONSIBILITY OF THE CONTRACTOR TO DETERMINE THE EXISTING LOCATIONS OF UTILITIES SHOWN ON THESE PLANS. ANY ADDITIONAL COST INCURRED AS A RESULT OF THE CONTRACTOR'S FAILURE TO VERIFY LOCATIONS OF THE EXISTING UTILITIES PRIOR TO BEGINNING CONSTRUCTION SHALL BE BORNE BY THE CONTRACTOR.
7. CONTRACTOR TO VERIFY ALL EXISTING INVERT ELEVATIONS FOR STORM DRAIN AND SANITARY SEWER CONSTRUCTION PRIOR TO ANY WORK. ALL WORK FOR STORM DRAIN AND SANITARY SEWER INSTALLATION SHALL BEGIN AT THE DOWNSTREAM CONNECTION POINT. THIS WILL ALLOW FOR ANY NECESSARY ADJUSTMENTS TO BE MADE PRIOR TO THE INSTALLATION OF THE ENTIRE LINE. IF THE CONTRACTOR FAILS TO BEGIN AT THE DOWNSTREAM CONNECTION POINT AND WORKS UPSTREAM, HE SHALL PROCEED AT HIS OWN RISK AND BE RESPONSIBLE FOR ANY ADJUSTMENTS NECESSARY.
8. CONTRACTOR SHALL UNCOVER AND EXPOSE ALL EXISTING UTILITY AND SEWER LINES WHERE THEY ARE CROSSED ABOVE OR BELOW BY THE NEW FACILITY BEING CONSTRUCTED IN ORDER TO VERIFY THE GRADE AND TO ASSURE THAT THERE IS SUFFICIENT CLEARANCE. PIPES SHALL NOT BE STRUNG NOR TRENCHING COMMENCED UNTIL ALL CROSSINGS HAVE BEEN VERIFIED FOR CLEARANCE. IF THE CONTRACTOR FAILS TO FOLLOW THIS PROCEDURE HE WILL BE SOLELY RESPONSIBLE FOR ANY EXTRA WORK OR MATERIAL REQUIRED IF MODIFICATIONS TO THE DESIGN ARE NECESSARY.
9. ALL EXISTING UTILITIES AND IMPROVEMENTS THAT BECOME DAMAGED DURING CONSTRUCTION SHALL BE COMPLETELY RESTORED TO THE SATISFACTION OF THE OWNER AT THE CONTRACTOR'S SOLE EXPENSE.
10. CONTRACTOR TO TAKE NECESSARY PRECAUTIONARY MEASURES TO PREVENT SOIL EROSION AND SEDIMENTATION. EXISTING AND PROPOSED DRAINAGE STRUCTURES TO BE TEMPORARILY COVERED WITH FILTER FABRIC OR EQUAL UNTIL SURROUNDING PAVEMENT IS INSTALLED.
11. ANY RELOCATION OF UTILITIES SHALL BE COORDINATED WITH THE OWNER AND CONDUCTED IN ACCORDANCE WITH ANY AND ALL REQUIREMENTS OF THE OWNER, INCLUDING FEES, BONDS. PERMITS AND WORKING CONDITIONS, ETC. THE OWNER SHALL PAY THE FEES, BONDS, AND FILE THE APPROPRIATE PERMITS FOR ALL SUCH RELOCATION WORK. ALL ON- SITE UTILITY WORK IS THE RESPONSIBILITY OF THE CONTRACTOR (MATERIALS AND INSTALLATION).
12. IF ARCHAEOLOGICAL MATERIALS ARE UNCOVERED DURING GRADING. TRENCHING OR OTHER EXCAVATION, EARTHWORK WITHIN 100 FEET OF THESE MATERIALS SHALL BE STOPPED UNTIL A PROFESSIONAL ARCHAEOLOGIST WHO IS CERTIFIED BY THE SOCIETY OF CALIFORNIA ARCHAEOLOGY (SCA) AND/OR THE SOCIETY OF PROFESSIONAL ARCHAEOLOGY (SOPA) HAS HAD AN OPPORTUNITY TO EVALUATE THE SIGNIFICANCE OF THE FIND AND SUGGEST APPROPRIATE MITIGATION MEASURES, IF THEY ARE DEEMED NECESSARY.
13. THESE PLANS DO NOT SPECIFY NOR RECOMMEND THE USE OR INSTALLATION OF ANY MATERIAL OR EQUIPMENT WHICH IS MADE FROM, OR WHICH CONTAINS ASBESTOS FOR USE IN THE CONSTRUCTION OF THESE IMPROVEMENTS. ANY PARTY INSTALLING OR USING SUCH MATERIALS OR EQUIPMENT SHALL BE SOLELY RESPONSIBLE FOR ALL INJURES. DAMAGES, OR LIABILITIES, OF ANY KIND, CAUSED BY THE USE OF SUCH MATERIALS, OR EQUIPMENT. NOTIFY OWNER WHEN DISCOVERING ASBESTOS MATERIALS. REFER TO SPECIFICATION 'HAZARDOUS MATERIALS PROCEDURES AND CONTROL' AND 'HAZARDOUS MATERIALS ABATEMENT AND CONTROL'.
14. THE CONTRACTOR SHALL MEET AND FOLLOW ALL (NPDES) NATIONAL POLLUTANT DISCHARGE ELIMINATION SYSTEM REQUIREMENTS IN EFFECT AT THE TIME OF CONSTRUCTION.
15. SHOULD IT APPEAR THAT THE WORK TO BE DONE OR ANY MATTER RELATIVE THERETO IS NOT SUFFICIENTLY DETAILED OR EXPLAINED ON THESE PLANS, THE CONTRACTOR SHALL CONTACT THE ENGINEER FOR SUCH FURTHER EXPLANATIONS AS MAY BE NECESSARY.
16. CONTRACTOR SHALL ARRANGE, INSTALL, AND PAY FOR ANY TEMPORARY UTILITIES, INCLUDING BUT NOT LIMITED TO TELEPHONE, ELECTRIC, SEWER, WATER, ETC.. THE CONTRACTOR IS TO COORDINATE ANY SUCH UTILITY NEEDS WITH THE OWNER.
17. ALL SITE AREAS SHALL BE GRADED AT 1% MINIMUM FOR DRAINAGE UNLESS OTHERWISE NOTED OR ALONG FLOWLINES OF CONCRETE LINED GUTTERS AND VALLEY GUTTERS.
18. ESTIMATED EARTHWORK QUANTITIES SHOWN ARE APPROXIMATE ONLY AND SHOWN FOR THE PURPOSES OF ESTIMATING GRADING PERMIT FEES, HOHBACH-LEWIN ASSUMES NO LIABILITY FOR THE ACCURACY OF THESE QUANTITIES.
19. WHERE EXISTING STRUCTURES ARE TO REMAIN IN CONSTRUCTION ZONE AREA, CONTRACTOR SHALL ADJUST RIMS OF THESE STRUCTURES, I.E. CATCH BASINS, VALVE BOXES, CLEAN OUTS, UTILITY BOXES, ETC, TO NEW FINISH GRADE.
20. CONTRACTOR SHALL CONTACT UNDERGROUND SERVICE ALERT FOR NORTHERN CALIFORNIA AT LEAST 48 HOURS (2 WORKING DAY) PRIOR TO COMMENCEMENT OF CONSTRUCTION. (800) 227-2600.
21. THE ORGANIC MATERIAL COVERING THE SITE SHALL BE STRIPPED AND STOCKPILED. THE STRIPPINGS SHALL BE USED TO BACKFILL ALL LANDSCAPE PLANTERS AND ROUGH GRADE MOUND AREAS, AS SHOWN ON LANDSCAPE DRAWINGS, TO WITHIN 1" OF GRADES SHOWN. EXCESS STRIPPINGS AND EXCAVATED MATERIAL SHALL BE REMOVED FROM THE SITE BY THE CONTRACTOR.
22. COMPACTION TO BE DETERMINED USING ASTM D1557-LATEST EDITION.
23. STORM DRAIN PIPES DESIGNATED AS SD FROM 4" TO 24" IN DIAMETER SHALL BE SDR-35 PVC. (GREEN-TITE PIPE BY MANVILLE OR APPROVED EQUAL), CLASS HDPE SMOOTH INTERIOR PIPE PER ASTM D3212 HANCOR SURE-LOK WT PIPE OR APPROVED EQUAL WITH CLASS 1 BACKFILL OR DUCTILE IRON PIPE DIP, IF SPECIFIED ON PLANS. NO MATERIAL SUBSTITUTE SHALL BE ALLOWED FOR DUCTILE IRON PIPE. ANY PIPES LARGER THAN 24" IN DIAMETER SHALL BE CLASS III REINFORCED CONCRETE PIPE RCP. PVC PIPE EXCEEDING 24" DIAMETER SHALL ONLY BE USED WHEN APPROVED BY MANUFACTURER IN THIS JURISDICTION.
24. PROPOSED SPOT GRADES (ELEVATIONS) SHOWN HEREON ARE FINISHED PAVEMENT GRADES, NOT TOP OF CURB GRADES, UNLESS NOTED OTHERWISE.
25. ALL WORK SHALL BE PERFORMED IN ACCORDANCE WITH APPLICABLE O.S.H.A. REGULATIONS.
26. CONSTRUCTION CONTRACTOR AGREES THAT IN ACCORDANCE WITH GENERALLY ACCEPTED CONSTRUCTION PRACTICES, CONSTRUCTION CONTRACTOR WILL BE REQUIRED TO ASSUME SOLE AND COMPLETE RESPONSIBILITY FOR JOB SITE CONDITIONS DURING THE COURSE OF CONSTRUCTION OF THE PROJECT, INCLUDING SAFETY OF ALL PERSONS AND PROPERTY; THAT THIS REQUIREMENT SHALL BE MADE TO APPLY CONTINUOUSLY AND NOT BE LIMITED TO NORMAL WORKING HOURS, AND CONSTRUCTION CONTRACTOR FURTHER AGREES TO DEFEND, INDEMNIFY AND HOLD DESIGN PROFESSIONAL HARMLESS FROM ANY AND ALL LIABILITY, REAL OR ALLEGED, IN CONNECTION WITH THE PERFORMANCE OF WORK ON THIS PROJECT, EXCEPTING LIABILITY ARISING FROM THE SOLE NEGLIGENCE OF DESIGN PROFESSIONAL.

GRADING NOTES:

1. UNDERGROUND UTILITY LOCATIONS SHOWN HEREON WERE TAKEN FROM RECORD DATA. NO GUARANTEE IS MADE OR IMPLIED AS TO THE ACCURACY OF SUCH RECORD DATA. NO EXCAVATIONS WERE MADE TO CONFIRM LOCATIONS. CONTRACTORS ARE CAUTIONED TO CONTACT U.S.A. UNDERGROUND AND TO EXERCISE EXTREME CARE IN VERIFYING ALL LOCATIONS PRIOR TO COMMENCING EXCAVATIONS OR OTHER WORK WHICH MAY AFFECT THESE UTILITIES.
2. IRRIGATION LATERALS, PARKING LOT LIGHTING WIRING AND SIGNAL WIRING NOT SHOWN. VERIFY LOCATION BEFORE COMMENCING TRENCHING. REPLACE OR REPAIR IMMEDIATELY WHERE BROKEN TO PROVIDE UNINTERRUPTED SERVICE.
3. ALL FINISH GRADES SHOWN ARE FINISH GRADE ELEVATIONS UNLESS NOTED OTHERWISE.

UTILITY NOTES:

1. THIS SURVEY IS NOT INTENDED TO REPRESENT THE EXACT LOCATIONS, SIZES OR EXTENT OF THE UTILITIES WITHIN THE AREA ENCOMPASSED BY THIS SURVEY. THEREFORE, IT IS THE RESPONSIBILITY OF THE OWNER AND/OR CONTRACTOR TO VERIFY THE LOCATION, SIZE AND EXTENT OF ANY EXISTING UTILITIES PRIOR TO DESIGN OR CONSTRUCTION. CONTRACTORS ARE CAUTIONED TO CONTACT U.S.A. UNDERGROUND AND TO EXERCISE EXTREME CARE IN VERIFYING ALL LOCATIONS PRIOR TO COMMENCING EXCAVATIONS OR OTHER WORK WHICH MAY AFFECT THESE UTILITIES.
2. IRRIGATION LATERALS, PARKING LOT LIGHTING WIRING AND SIGNAL WIRING NOT SHOWN. VERIFY LOCATION BEFORE COMMENCING TRENCHING. REPLACE OR REPAIR IMMEDIATELY WHERE BROKEN TO PROVIDE UNINTERRUPTED SERVICE.
3. UTILITY ABANDONMENT/REMOVAL: DISCONNECT AND CAP PIPES AND SERVICES TO REMAIN. REMOVE ALL PORTIONS OF ALL UTILITIES WITHIN NEW BUILDING FOOTPRINT AND DISPOSE OF OFF-SITE. OTHERWISE ABANDON IN PLACE UNLESS NOTED OTHERWISE.
4. NOTIFY THE ENGINEER IMMEDIATELY OF ANY UTILITIES ENCOUNTERED THAT ARE NOT SHOWN ON THE DRAWINGS. PRESERVE AND REPAIR ANY UTILITIES THAT ARE DAMAGED AND THAT ARE TO REMAIN.
5. CONTRACTOR IS RESPONSIBLE FOR COORDINATING ALL CROSSINGS OF NEW UTILITIES WITH EACH OTHER, AND WITH EXISTING UTILITIES. VERIFY EXISTING PIPE LOCATION AND INVERT PRIOR TO INSTALLING NEW UTILITIES. NOTIFY THE ENGINEER IMMEDIATELY OF ANY DISCREPANCIES OR DEVIATIONS.
6. PRIOR TO CONNECTING TO EXISTING UTILITIES FIELD VERIFY LOCATION & INVERT OR DEPTH PRIOR TO INSTALLING NEW PIPE OR EQUIPMENT.
7. ALL CATCH BASINS WITHIN VEHICULAR AREAS SHALL BE TRAFFIC RATED FOR H20 VEHICULAR LOADS. FOR CATCH BASINS IN WALKWAY AREAS, INCLUDING EXISTING CATCH BASINS, USE HEEL PROOF AND ADA GRATE.

NORTH

0 10' 20' 30' 40'

SCALE: 1" = 20'

CALL BEFORE YOU DIG USA 800.227.2600

DISCLAIMER: TOPOGRAPHIC INFORMATION, INCLUDING PROPERTY LINES, EASEMENTS, EXISTING GRADES, EXISTING UTILITIES LOCATIONS, ETC., SHOWN ARE FOR GENERAL REFERENCE ONLY AND HAVE BEEN PROVIDED BY OTHERS AND HAVE NOT BEEN INDEPENDENTLY VERIFIED BY HOHBACH-LEWIN, INC.

OWNER: SAN RAFAEL CITY SCHOOLS

PROJECT NAME: VENETIA VALLEY SCHOOL FIELD

CLIENT ADDRESS: 177 N SAN PEDRO RD, SAN RAFAEL, CA 94903

SEAL:

REGISTERED PROFESSIONAL ENGINEER DANIEL G. FERRIS NO. C18406 CIVIL STATE OF CALIFORNIA

REVISIONS:

	DESCRIPTION	DATE
1		
2		
3		
4		
5		
6		
7		
8		
9		
10		

DATE ISSUED:

PROJECT NO:

SCALE: AS SHOWN

SHEET NUMBER: C3.0

SHEET TITLE: GRADING AND UTILITY PLAN

HOHBACH-LEWIN, INC.
STRUCTURAL & CIVIL ENGINEERS
260 Sheridan Avenue, Suite 150
Palo Alto, CA 94306
(650) 617-5930, Fax (650) 617-5932
HOHBACH-LEWIN #14997.34

Plot Date: Feb 8, 2023 - 5:28 PM